Martin

Levelling Components



USER MANUAL

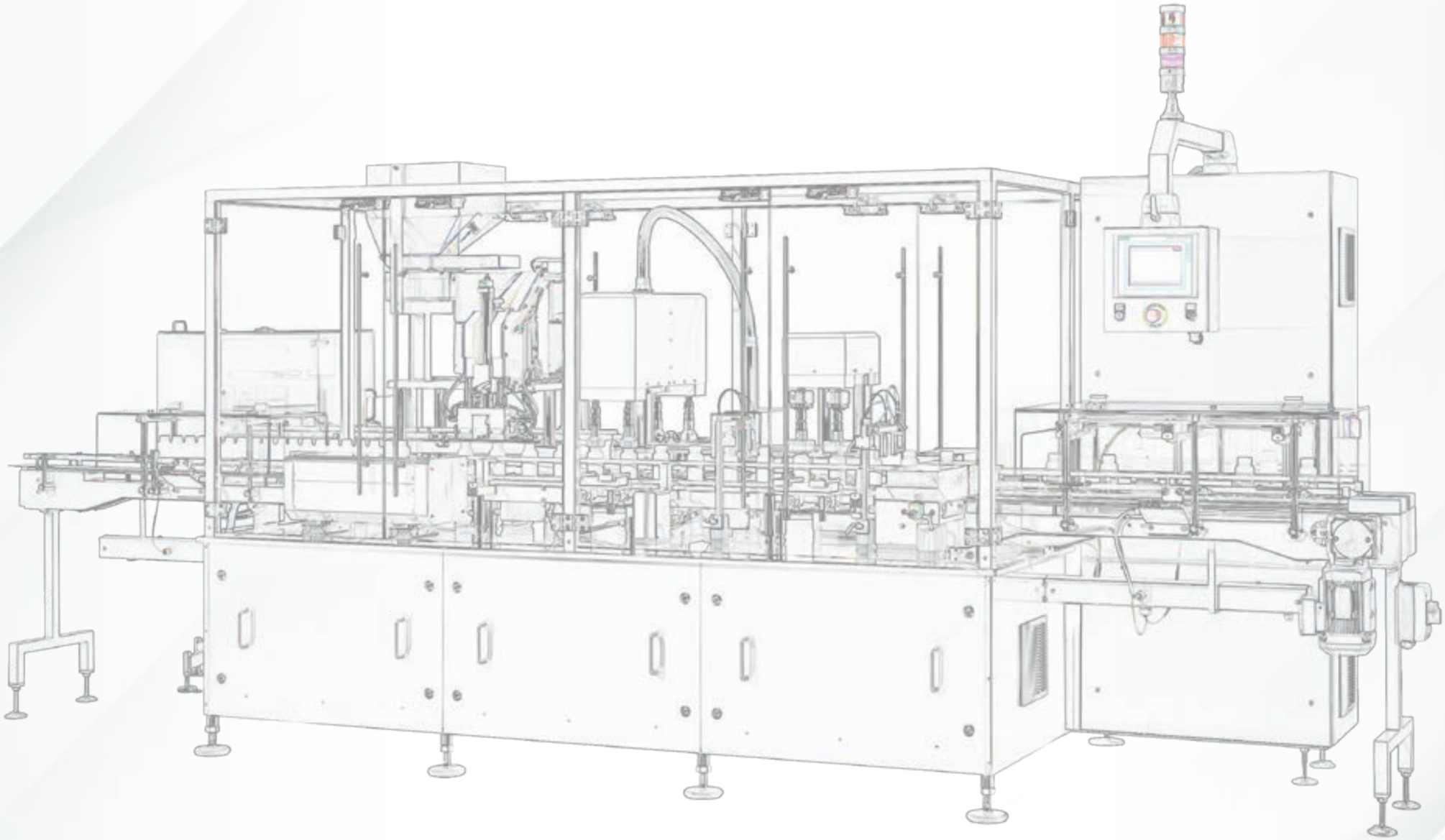

Martin

Levelling Components





UFFICI
OFFICE





MAGAZZINO
WAREHOUSE

Martin

Levelling
Components

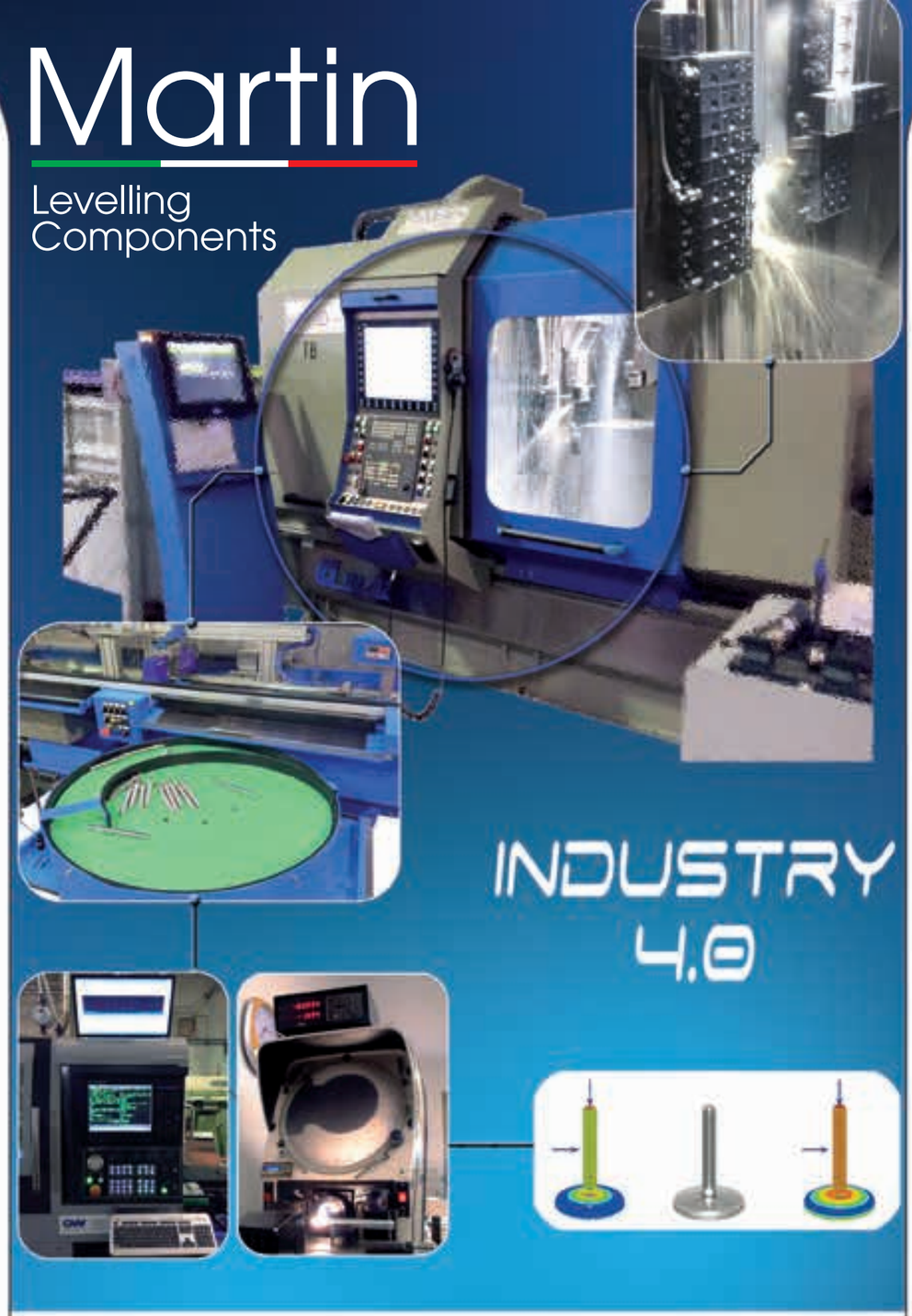

Martin Levelling Components si è specializzata nella produzione di componenti di livellamento realizzando una linea prodotto unica nel suo genere per la vastità dei modelli che mirano a soddisfare le richieste di tutti i settori industriali.

L'azienda Martin S.p.A. si sviluppa su una superficie globale di 7.000 mq rispettivamente ripartita in:

- **REPARTO PRODUTTIVO**
  composto da 55 macchine CNC di ultima generazione, il tutto coadiuvato dalla più recente tecnologia Industria 4.0
- **REPARTO STAMPAGGIO**
  dispone di numero 2 consociate per stampaggio con presse a iniezione B.M.B, FABES, G.B.F per lo stampaggio di plastica e gomma.
- **MAGAZZINO**
  logistica e confezionamento
- **UFFICI**
  Tecnici, Commerciali ed Amministrativi (500 mq)

Martin oltre alla copertura del mercato nazionale, esporta in più di 80 paesi ed è in grado di servire clienti in tutto il mondo.

Martin SpA

Martin Levelling Components *has specialized in the production of levelling components. The range is characterized by a variety of models, which granting maximum flexibility, is focused to fulfill the requirements of the whole industry.*

The company Martin S.p.A. spreads over a global area of 7,000 square meters respectively divided into:

- ***PRODUCTION DEPARTMENT***
  composed of 55 latest-generation CNC machines, all supported by the latest Industry 4.0 technology
- ***MOLDING DEPARTMENT***
  it has two subsidiaries with injection molding machines B.M.B, FABES, G.B.F for molding plastic and rubber.
- ***WAREHOUSE***
  logistic and assembly
- ***OFFICE***
  Technical, Commercial and Administrative (500 sqm)

Martin in addition to covering the national market, exports to more than 80 countries and is able to serve customers worldwide.

Martin SpA

▸ STAMPAGGIO PLASTICA
▸ *PLASTIC MOLDING*



▸ STAMPAGGIO GOMMA
▸ *RUBBER MOLDING*





SYNERGY

- Power Transmission
- Hydraulics
- Pneumatics
- Linear Technology
- And more…





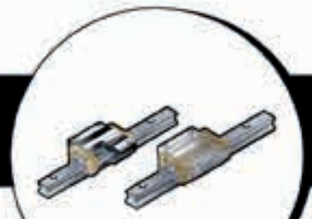



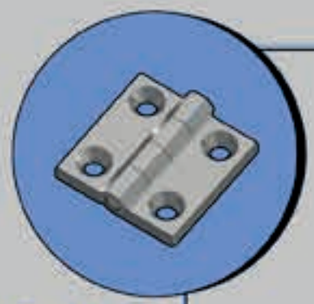

✓ By Martin

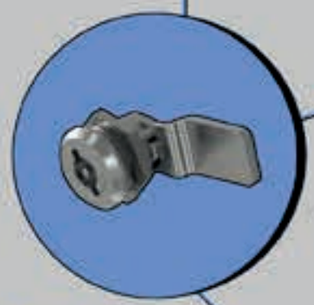

✓ By Martin





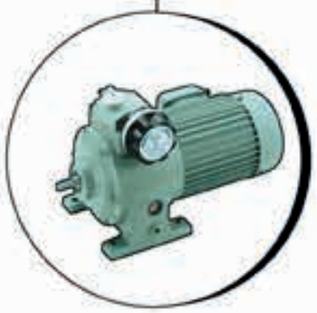



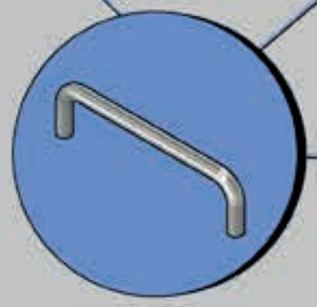

✓ By Martin



✓ By Martin

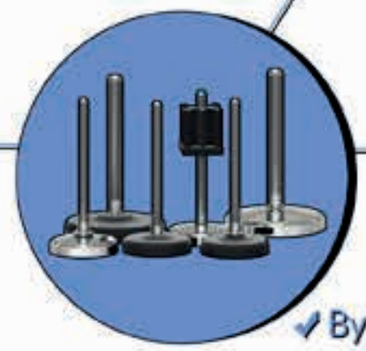

✓ By Martin

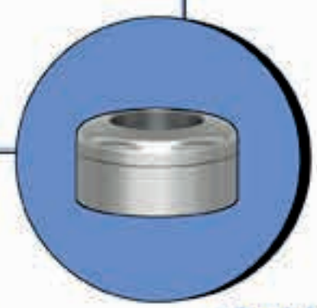

✓ By Martin

LINEA PLASTICA
PLASTIC LINE



LINEA ACCIAIO INOSSIDABILE
STAINLESS STEEL LINE



LINEA ACCIAIO
STEEL LINE



LINEA TEKNO-FIX
TEKNO-FIX LINE

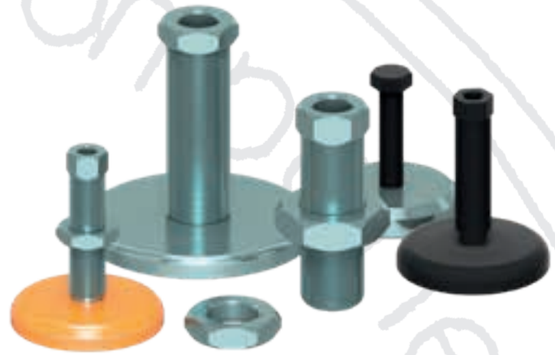

LINEA IGIENICA 3-A
HYGIENIC 3-A LINE



LINEA USDA
USDA LINE



LINEA MINI
MINI LINE



LINEA ANTIVIBRANTE
ANTI-VIBRATION LINE

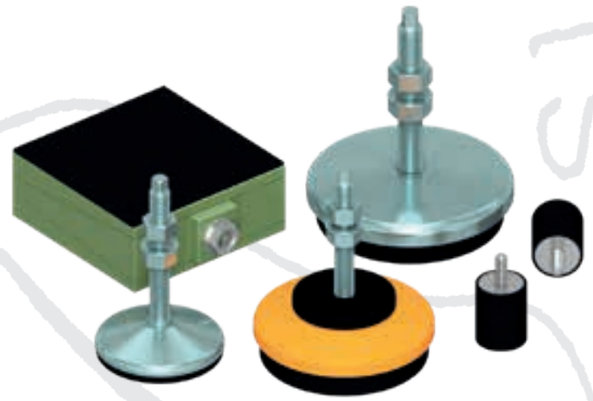

ACCESSORI INOX
STAINLESS STEEL ACCESSORIES



LINEA STAMPATA
PRESSED LINE



PACKAGING

BEVERAGE





BOTTLING



FILLING



LABELLING



FOOD

PASTA



PIZZA



BAKERY



DRYERS



MIXERS







FISH - MEAT PROCESSING





WATER PLANT



MILK PLANT



SLAUGTHER HOUSE









BREWING



DAIRY



TANKS









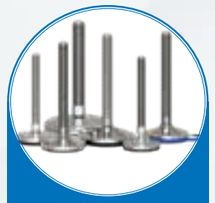





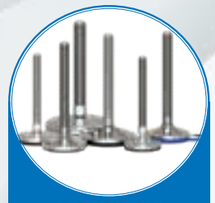



INDUSTRIAL KITCHENS







SUPPORTS



ACCESSORIES

CHEMICAL



COSMETICS



PHARMACEUTICAL





PLASTIC



ACCESSORIES



TEKNO HYGIENIC

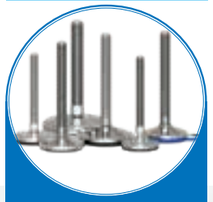

STAINLESS STEEL

CONVEYORS





MATERIAL HANDLING





CONVEYORS

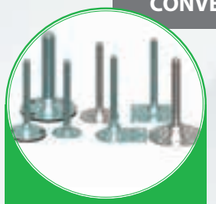

STAMPED

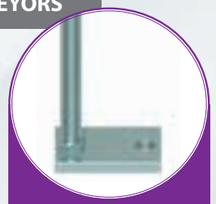

RECTANGULAR

AUTOMOTIVE





STAMPED



RECTANGULAR



STEEL



TEKNO FIX

ROBOTS - PALLETIZERS







STAMPED



RECTANGULAR



STEEL



TEKNO FIX



ANTI VIBRATIONS

AIRPORTS



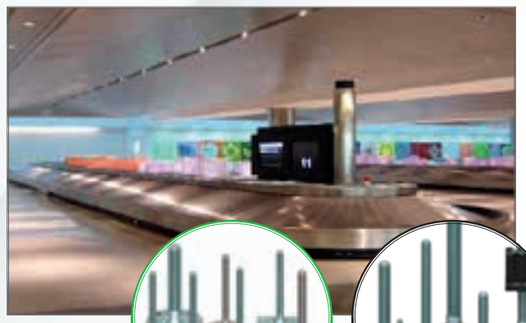



STAMPED



PLASTIC

ELECTRICAL ENCLOSURES





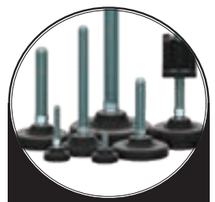

PLASTIC

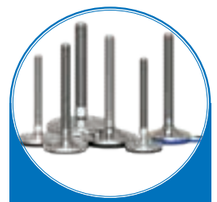

STAINLESS STEEL



ROTATING BRACKET



ACCESSORIES

MACHINERIES

WATER CUTTING



PLASMA CUTTING



LASER CUTTING





PLASTIC

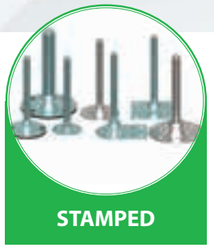

STAMPED



STEEL



TEKNO FIX



ANTI VIBRATIONS

PAPER - TOBACCO



GLASS - WOOD WORKING



SCALES



INJECTION





COATING





CNC - LATHE - DRILLING - MILLS - PRESS - ETC.









METAL WORKING



CLOTHING - TEXTILE



PVC - ALUMINIUM PROFILE



TRANSFERS

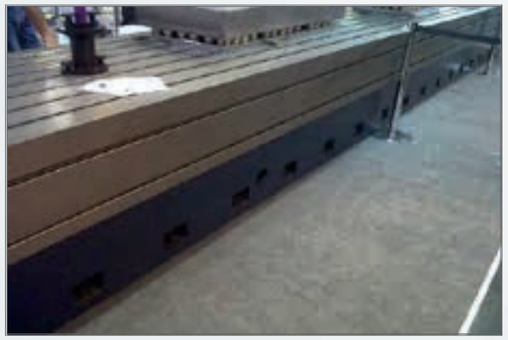











MISCELLANEOUS

WHITE INDUSTRY





STRUCTURE - SCAFFOLD



BUIDING - ELEVATOR

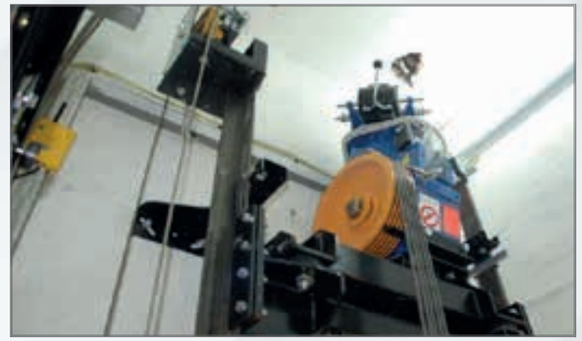

VIBRATION - MARINE





MOBILE HOMES



POOLS - GAMES



GREEN ENERGY









FUN PARKS



WELLNESS EQUIPMENT

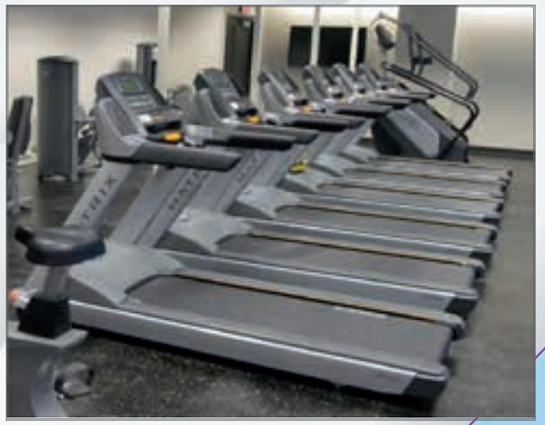

NOTE

CERTIFICAZIONI
CERTIFICATIONS



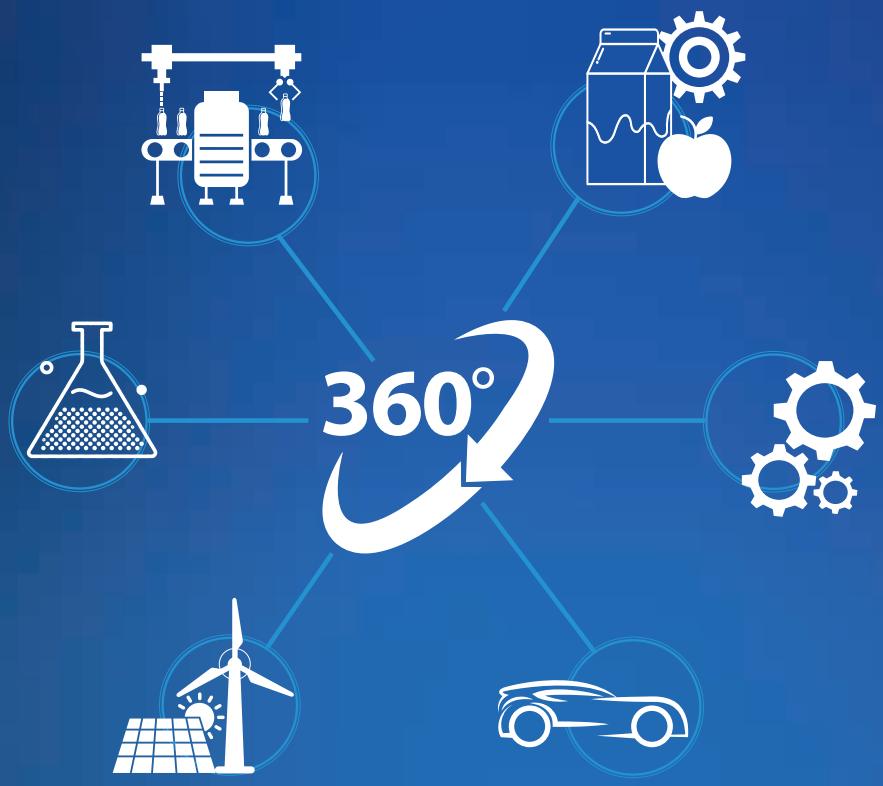

Martin
Levelling Components

MARTIN spa
Via Cave, 1 • 25050 Provaglio d'Iseo (BS)
Tel. +39 030 9823625 • **Fax** +39 030 9882547
Info Italia: commerciale@martinlevelling.it
Export dpt: info@martinlevelling.it

www.martinlevelling.it